ERSATZTEILLISTE

SPARE PARTS LIST I LISTE DES PIÈCES DE RECHANGE I LISTA DE REPUESTOS

SLSTRS**400**

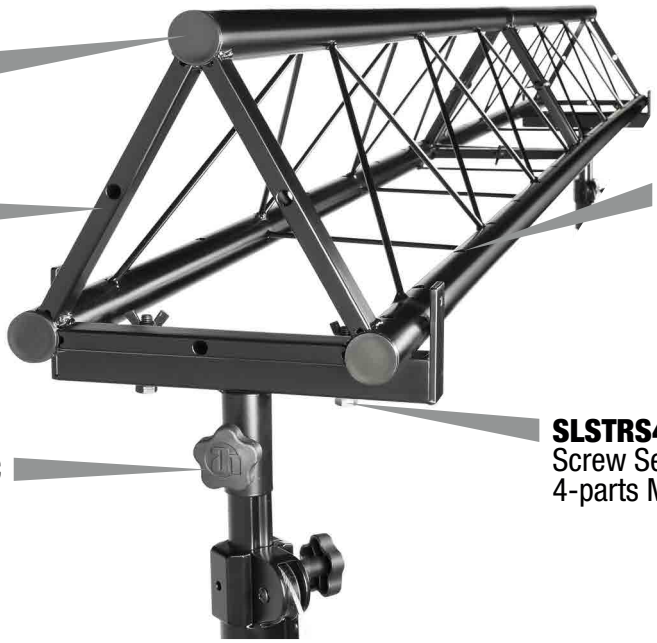

SLSTRS400SPAREB
Plastic End Cap Truss

SLSTRS400SPAREK
Truss part, Steel
150cm x 29cm

SLSTRS400SPAREC
Knop for Truss holder M8x12

SLSTRS400SPAREI
Lamp mounting screws set
10-parts M10x50 and accessories

SLSTRS400SPAREA
Screw Set for Truss holder
4-parts M10x50 with washers and nuts

SLSTRS400SPARED
Truss connector screw set 3 screws
M10x85 and accessories

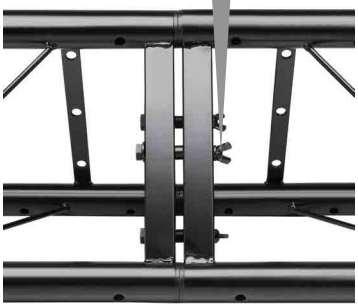

SLSTRS400SPAREJ
Rubber foot, i.d. 31mm

SLSTRS400SPAREH
Crank complete

SLSTRS400SPAREE
Knob for base M10x28

SLSTRS400SPAREG
Safety pin with cord

SLSTRS400SPAREF
knob for fixation of height
adjustment M8x16

Adam Hall GmbH · Daimlerstraße 9 · D-61267 Neu-Anspach
Telefon: +49 (0) 60 81 / 94 19 - 0 · Fax: +49 (0) 60 81 / 94 19 - 1000 · www.adamhall.com